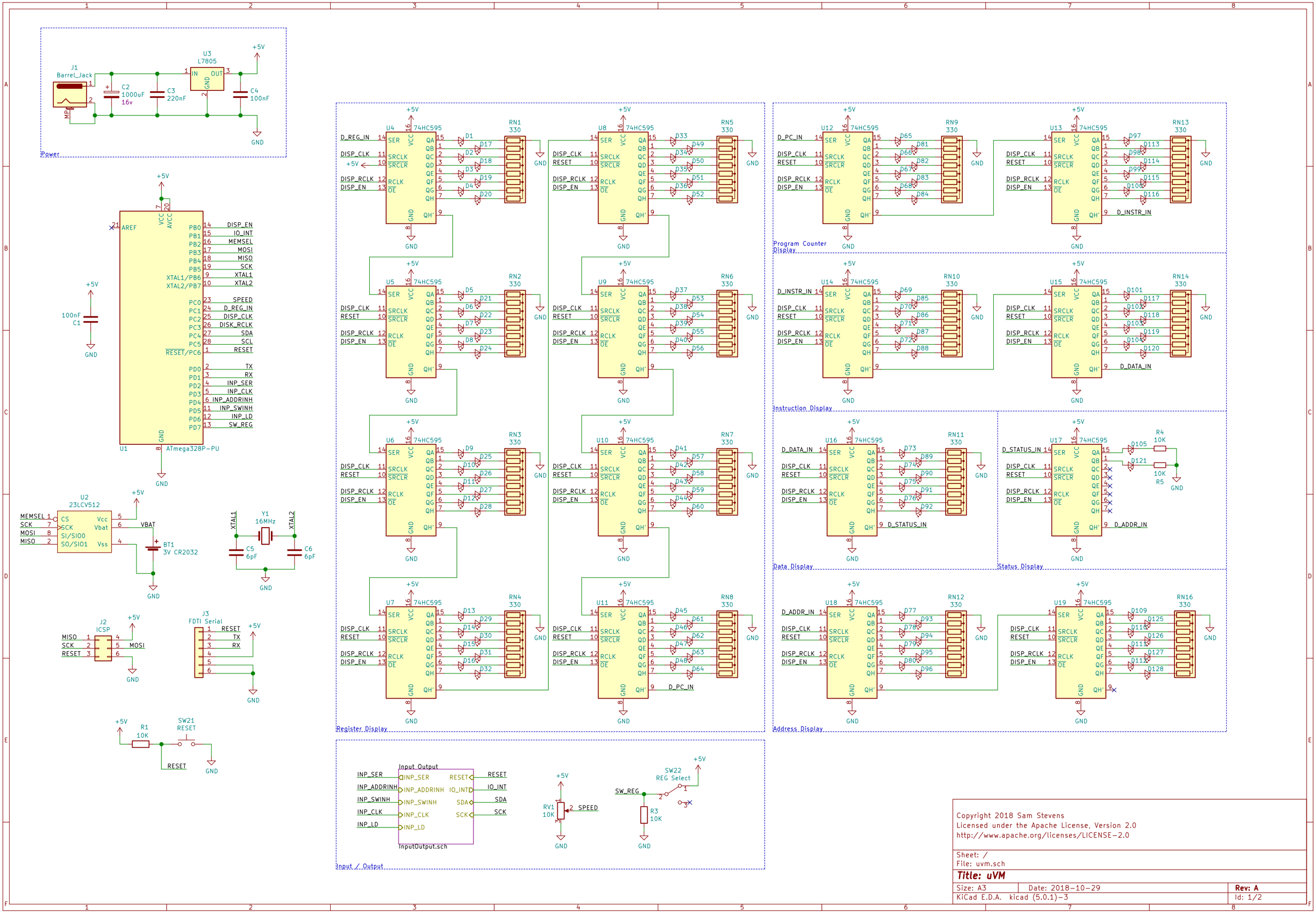

Copyright 2018 Sam Stevens
Licensed under the Apache License, Version 2.0
http://www.apache.org/licenses/LICENSE-2.0

Sheet: /
File: uvm.sch

Title: uVM

Size: A3	Date: 2018-10-29	Rev: A
KiCad E.D.A. kicad (5.0.1)-3		Id: 1/2

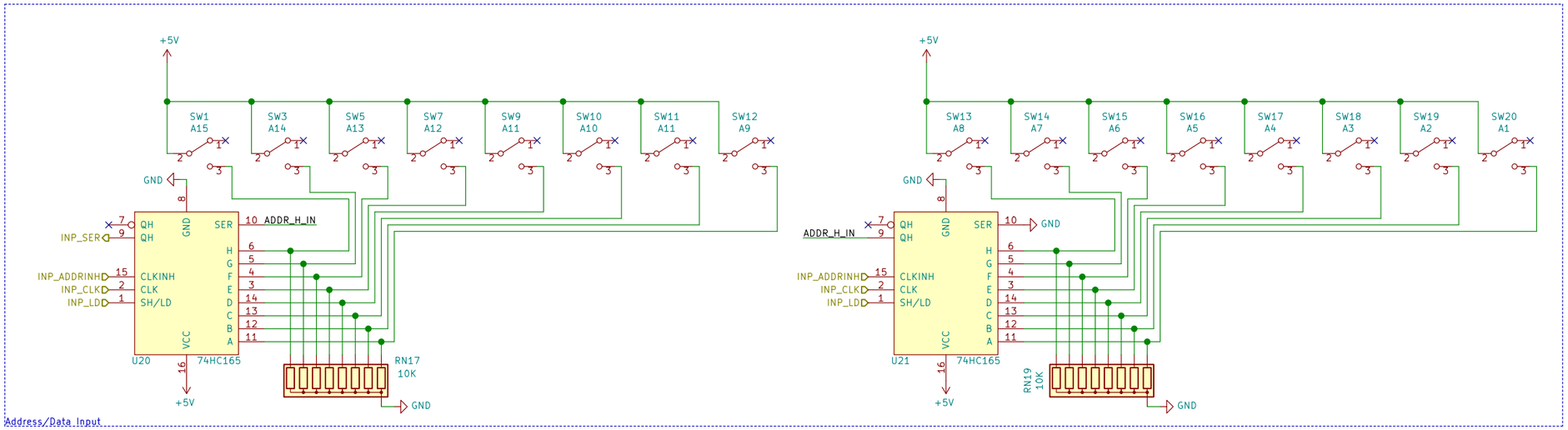

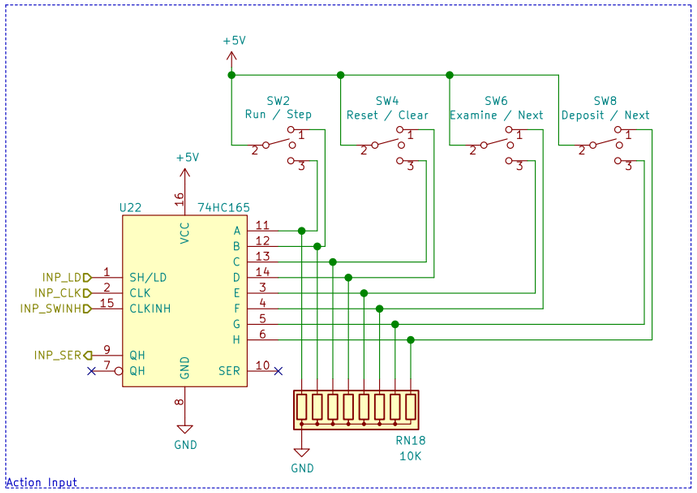

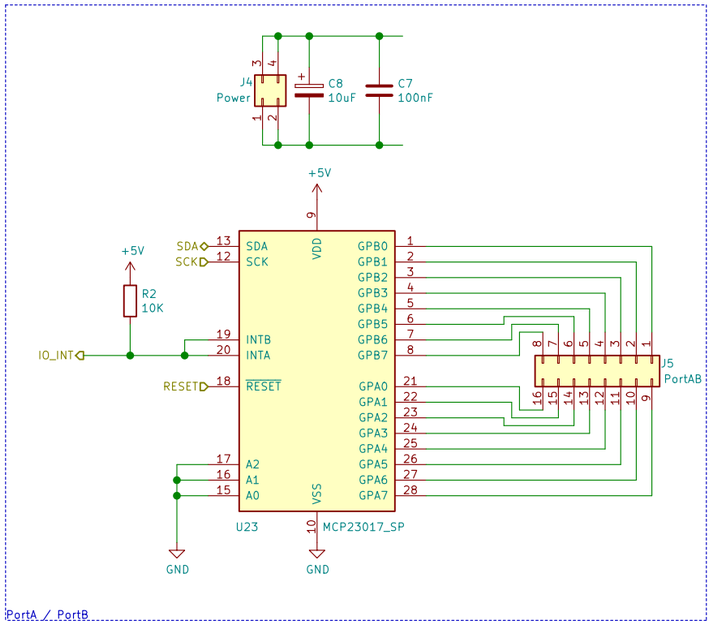

Copyright 2018 Sam Stevens
Licensed under the Apache License, Version 2.0
http://www.apache.org/licenses/LICENSE-2.0

Sheet: /Input Output/
File: InputOutput.sch

Title: uVM

Size: A3	Date: 2018-10-29	Rev: A
KiCad E.D.A. kicad (5.0.1)-3		Id: 2/2